CASE FINISH	CURRENT (AMPS)	WORKING VOLTAGE -55°C TO +85°C AC	WORKING VOLTAGE -55°C TO +85°C DC	WORKING VOLTAGE -55°C TO +125°C AC	WORKING VOLTAGE -55°C TO +125°C DC	MAXIMUM DC RESISTANCE (OHMS)	MAXIMUM VOLTAGE DROP DC	MAXIMUM VOLTAGE DROP AC	MINIMUM CAPACITANCE (uF)
SOLDER	5.0	125	250	125	180	0.015	--	--	--

MIN. INSERTION LOSS PER MIL-STD-220 FULL LOAD, +25°C												
14 KHz	30 KHz	50 KHz	75 KHz	100 KHz	150 KHz	300 KHz	500 KHz	1 MHz	10 MHz	100 MHz	1 GHz	10 GHz
--	--	--	--	--	--	--	--	43	80	--	80	--

PART MARKING:
SCI
9001-100-1025
DATE CODE

PACKAGE MARKING:

STANDARD

MARKING NOTES:

N/A

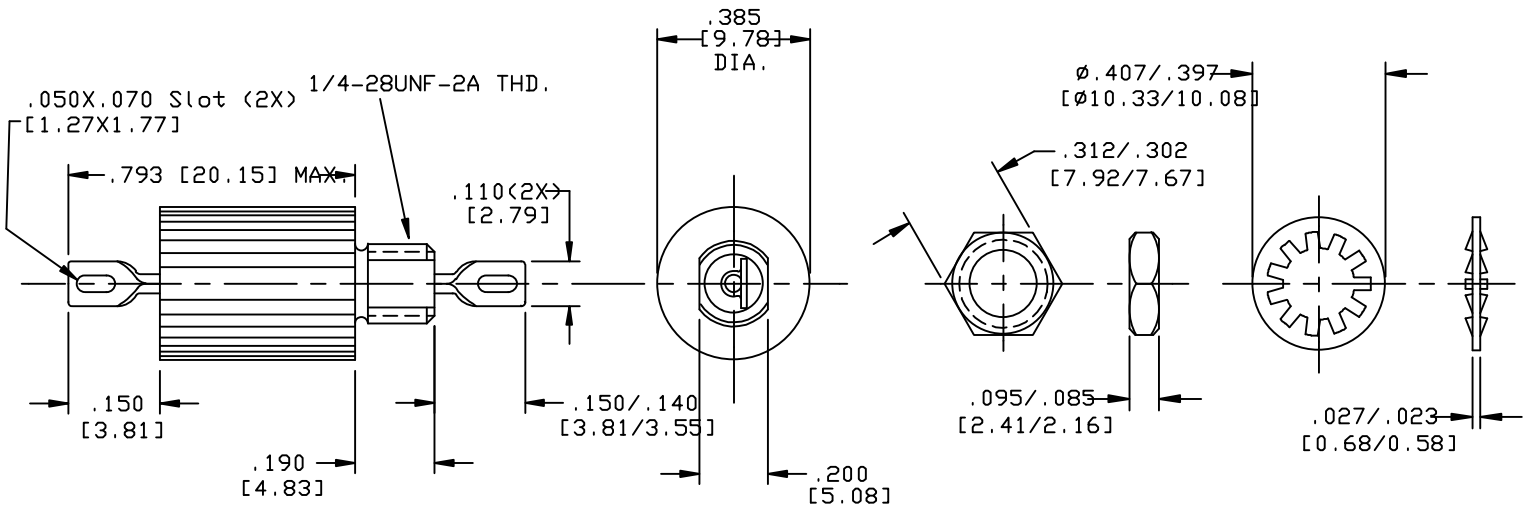

SCHEMATIC

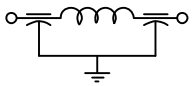

MTG. HARDWARE

NOTES:

1) MOUNTING TORQUE NOT TO EXCEED 7in-lbs.

REV. NO.	CHANGE NOTICE NO.
4	CN 183715

UNLESS OTHERWISE SPECIFIED DIMENSIONS ARE IN INCHES. [MILLIMETERS]

DO NOT SCALE.

TOLERANCES UNLESS OTHERWISE SPECIFIED
Fractions
Dec. .xx±
Dec. .xxx±010
Angles ±0° 30'

CODE IDENT. NO. OLSP2

SPECTRUM CONTROL INC.

Dwn MAYNARD
Ck 03/32/98

Sheet 1 of 1

ERIE, FAIRVIEW PENNSYLVANIA

Description Low Pass EMI Filter

9001-100-1025

Quality Products From The Specialists In Electro-Magnetic Compatibility