APPROVED: _____

DATE: _____ TITLE: _____

Rev	AWO #	Description	Date	Appr
-		RELEASED	3/30/16	
A		UPDATED SPEC.	6/20/16	HR/CK

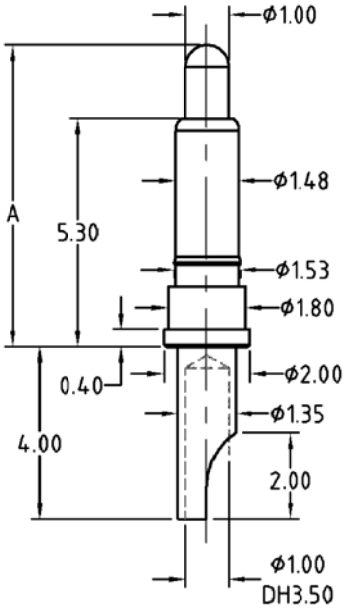

ADAM P/N	Initial Height
PH–MV5S–5365	6.5mm
PH–MV5S–5370	7.0mm
PH–MV5S–5375	7.5mm
PH–MV5S–5380	8.0mm

Working Stroke	Spring Force
1.0mm	70g

Rated Current	Rated Voltage
5A Max	12V

SPECIFICATIONS:
Material:
Plunger: Brass, Gold plated
Barrel: Brass, Gold plated
Spring: SUS Surface treatment
Electrical:
Contact resistance: 20 mohms max
Mechanical:
Full Stroke: 1.40mm
Durability: 1,000,000 Cycles
Temperature Rating:
Operating temperature: −55°C to +125°C
Environmental:
Lead free, RoHS compliant.

RoHS COMPLIANT

UNLESS OTHERWISE SPECIFIED
ALL DIMENSIONS ARE MILLIMETERS
TOLERANCES: EXCEPT AS NOTED

MM		HOLES	
.X	± .25		
.XX	± .15	Ø.XX	±.013
.XXX	± .05		

APPROVALS		DATE
DRAWN	HR	3/30/16
CHECKED	CK	3/30/16
APPROVED		

ADAM TECH
909 Rahway Avenue, Union, NJ 07083
Phone: 908-687-5000 Fax: 908-687-5710

TITLE
SOLDER CUP SPRING LOADED PIN, STRAIGHT, HIGH CURRENT

SIZE	PART NO.	REV.
X	PH-MV5S-53XX	A

REF: S00170C | SCALE: NTS | SHEET 1 OF 1