Rev	AWO #	Description	Date	Appr
-		RELEASED	2/23/10	

APPROVED: _____

DATE: _____ TITLE: _____

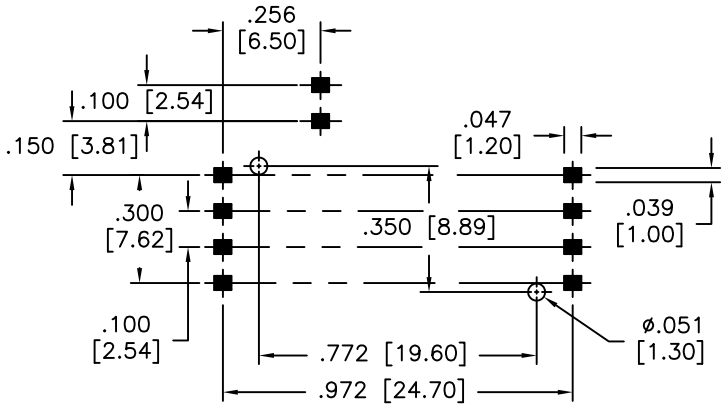

RECOMMENDED PCB LAYOUT

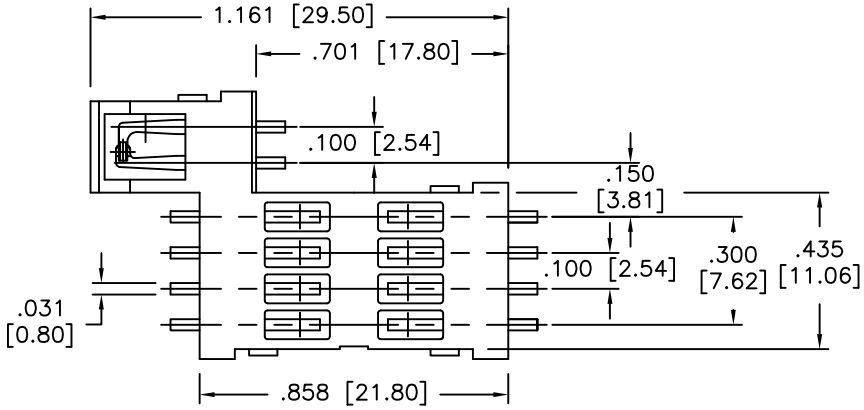

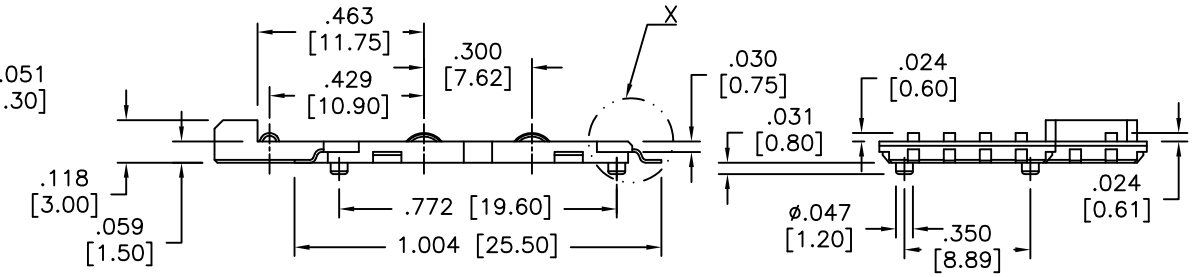

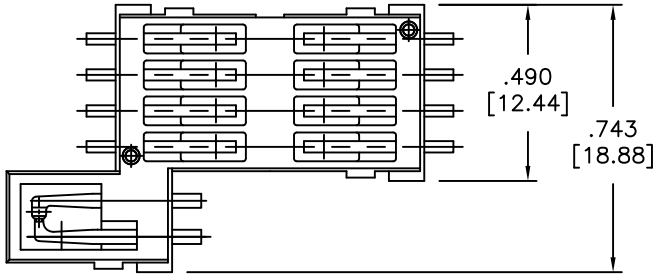

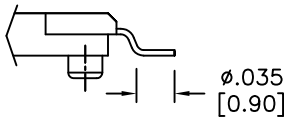

DETAIL X

SPECIFICATIONS:

Material:
Insulator: Nylon 9T, rated UL 94V-0
Insulator color: Black
Contacts: Phoshpor Bronze
Switch Terminal: Phosphor Bronze

Plating:
Gold flash over Nickel underplate on contact area,
Tin over Copper underplate on SMT tails.

Electrical:
Current rating: 0.5 Amps max
Contact resistance: 100 mohms max.
Insulation resistance: 1000 Mohms min
Dielectric withstanding voltage: 500 VAC for 1 minute

Temperature Rating:
Operating temperature: -40°C to +90°C

Environmental:
Lead free, RoHS compliant.
Recommended soldering temp: 260°C for 5 sec.

RoHS COMPLIANT

UNLESS OTHERWISE SPECIFIED
ALL DIMENSIONS ARE INCHES [MM]
TOLERANCES: EXCEPT AS NOTED

INCHES		HOLES	
.X	± .10	Ø.X	±.10
.XX	± .020	Ø.XX	±.015
.XXX	± .015	Ø.XXX	±.010

APPROVALS		DATE
DRAWN	DY	2/23/10
CHECKED		
APPROVED		

ADAM TECH
909 Rahway Avenue, Union, NJ 07083
Phone: 908-687-5000 Fax: 908-687-5710

TITLE: SIM CARD CONNECTOR, 8 POSITION SURFACE MOUNT

SIZE	PART NO.	REV.
X	SCC-H-08-SG-SMT	-

REF: S00009T | SCALE: NTS | SHEET 1 OF 1