MICRO SWITCH
a Honeywell Division
FED.MFG.CODE 91929

SWITCH-BASIC

CATALOG LISTING
BZ-1R374-P4

X111311-BZ

REPLACES 201017

CATALOG LISTING BZ-1R374-P4 PAGE 1 OF 1

RELEASE NO.

ISSUE 5

CHECK

REVISIONS

A	202882	23 MAR 05
	C S L 17 APR 01	
B	204822	
	G J W JAN 02	
C	206291	AK
	MDM 23 AUG 02	
D	0011966	
	CVS 23 MAR 05	

CHECK

07 AUG 00

S A V

CHECK

07 AUG 00

DRAWN D L T

RASTER

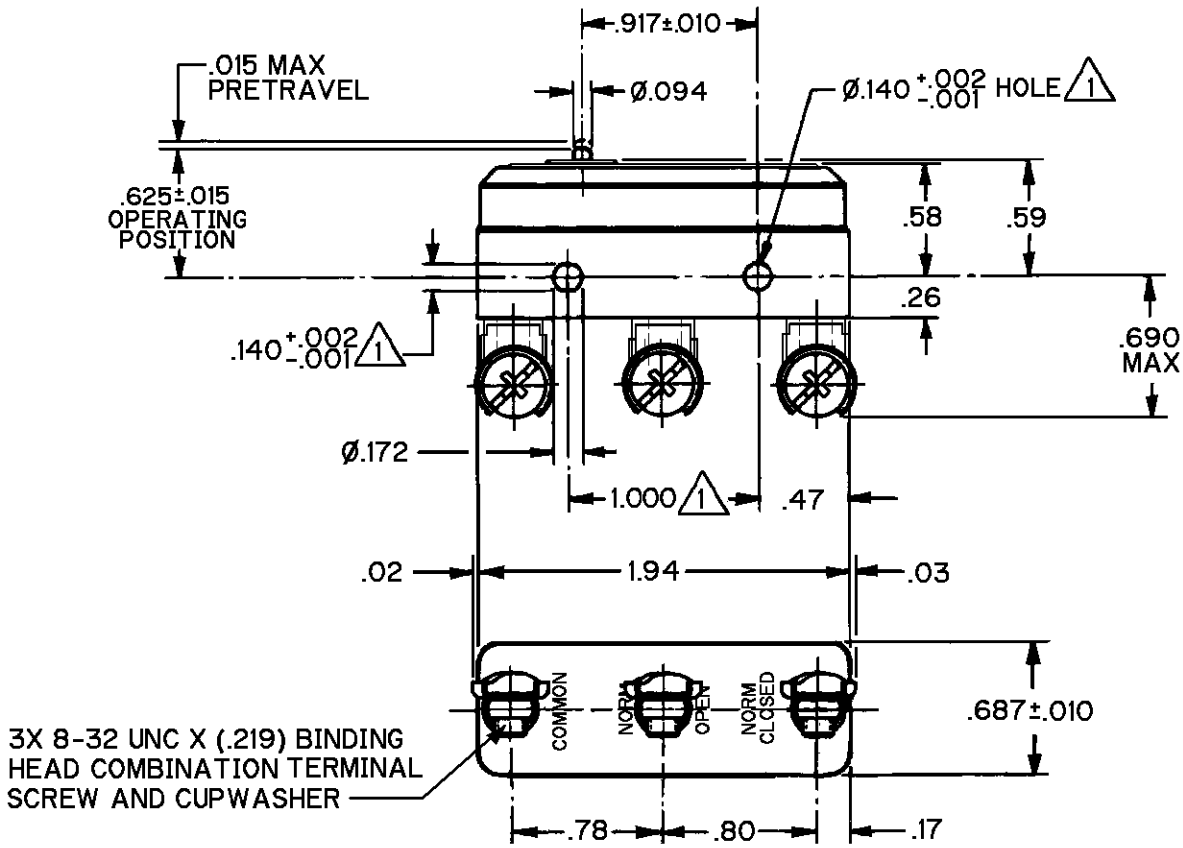

NOTE
1 MOUNTING HOLES WILL ACCEPT PINS OR SCREWS OF Ø.139 MAX ON 1.000±.002 CENTERS

ANSI Y14.5M-1982 APPLIES

THIS DRAWING COVERS A PROPRIETARY ITEM AND IS THE PROPERTY OF MICRO SWITCH, A DIVISION OF HONEYWELL. THIS DRAWING IS NOT TO BE COPIED OR USED WITHOUT THE APPROVAL OF MICRO SWITCH.

THIRD ANGLE PROJECTION

CHARACTERISTICS

OPERATING FORCE - - - - - - 8 - 10 OZ
RELEASE FORCE - - - - - - - 4 - 5 OZ
DIFFERENTIAL TRAVEL - - - .0005-.0015
OVERTRAVEL - - - - - - - - - .015 MIN

ELECTRICAL DATA

CONTACT ARRANGEMENT
SPDT

L103
15A 125, 250 OR 480 VAC
1/8HP 125 VAC, 1/4HP 250 VAC

16A 250V ~ T85 5E4

SCALE FULL — DO NOT SCALE PRINT

UNLESS OTHERWISE SPECIFIED TOLERANCES ARE

ONE PLACE	(.0)	±.030
TWO PLACE	(.00)	±.015
THREE PLACE	(.000)	±.005
ANGLES		±

WEIGHT .060 LB