RED INDICATES ORIGINAL

TABLE 1				
DASH NO	CONN TYPE	IMPD (OHMS)	MATERIAL 5	ASSEMBLE PER
-1	PL220	50	1-0442-016	TAI-A118
-2	CJ220		1-0443-016	
-3	PL240		1-0446-016	
-4	CJ240		1-0445-016	
-5	BJ226		1-0472-016	TAI-123
-6	BJ229		1-0473-016	
-7	BJ246		1-0046-016	
-8	BJ249		1-0047-016	
-9	UPL220	75	1-0468-016	TAI-D118
-10	UPL240		1-0041-016	
-11	PL223	50	1-0009-016	TAI-A118
-12	UPL223	75	1-0050-016	TAI-D118
-13	PL240S	50	1-0446-016	TAI-A118
-14	UPL240S	75	1-0041-016	TAI-D118
-15	UBJ229		1-0488-016	TAI-123
-16	UCJ220		1-0494-016	TAI-D118
-17	UCJ240		1-0496-016	
-18	UBJ226		1-0489-016	TAI-123
-19	UPLR220		1-0504-016	TAI-221
-20	UPLFF220		1-0517-016	TAI-223
-21	UBJ220		1-0515-016	TAI-D118

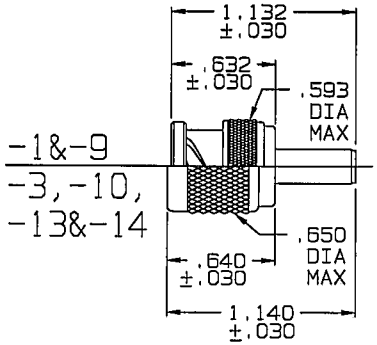

DATA CONTAINED IN THIS DOCUMENT IS PROPRIETARY TO TROMPETER ELECTRONICS INC. AND SHALL NOT BE DISCLOSED, COPIED OR USED FOR PROCUREMENT OR MANUFACTURE WITHOUT EXPRESS WRITTEN PERMISSION.

REVISIONS				
REV	ED	DESCRIPTION	DWN	APPROVED / DATE
A	13355	GENERAL UPDATE: SEE ECO	DKC	4/18/00

105-1244 SH 1C

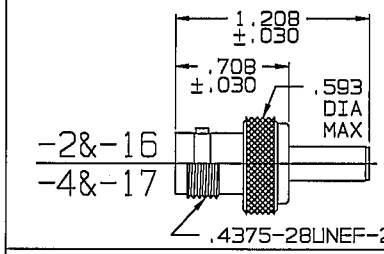

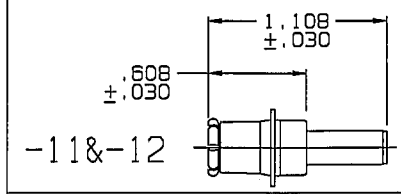

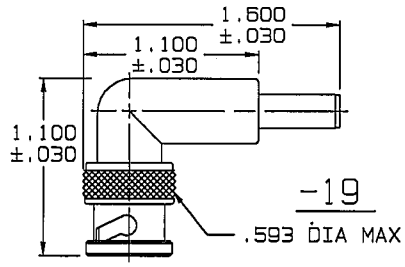

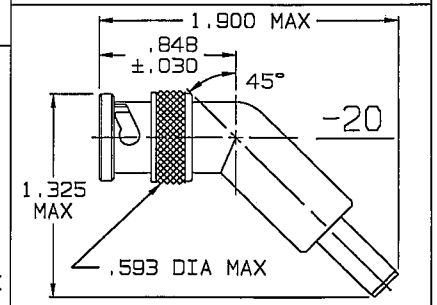

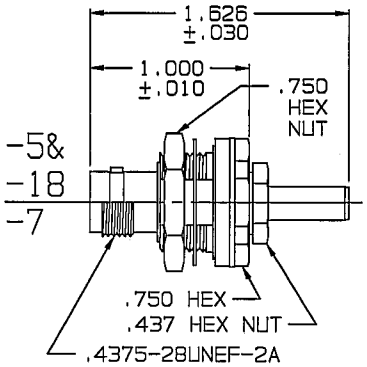

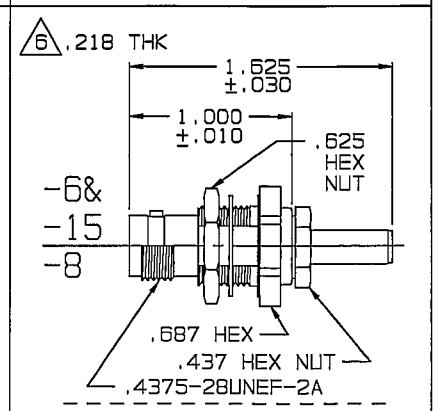

CENTER CONTACT CRIMP TOOLING			
CONTACT TYPE	MILITARY 8 POINT INDENTER	COMMERCIAL HEX	COMMERCIAL 8 POINT INDENTER
50 OHM PIN CONTACT	M22520/1-01 BASIC TOOL WITH M22520/1-12 TURRET HEAD SELECTOR NO. 6	TEI CT4L BASIC TOOL WITH TEI CD3-2 DIE, CLOSURE C (.068 HEX)	N/A
50 OHM SOCKET CONTACT	M22520/1-01 BASIC TOOL WITH M22520/1-12 TURRET HEAD SELECTOR NO. 6	TEI CT4L BASIC TOOL WITH TEI CD3-2 DIE, CLOSURE C (.068 HEX)	N/A
75 OHM PIN CONTACT	N/A	TEI CT4L BASIC TOOL WITH TEI CD3-2 DIE, CLOSURE D (.042 HEX)	TEI 010-0055
75 OHM SOCKET CONTACT	N/A	TEI CT4L BASIC TOOL WITH TEI CD3-2 DIE, CLOSURE D (.042 HEX)	TEI 010-0088

CRIMP SLEEVE TOOLING		
CONNECTOR TYPE	MILITARY HEX	COMMERCIAL HEX
50 OR 75 OHM CONNECTORS	M22520/5-01 BASIC TOOL WITH M22520/5-55 DIE, CLOSURE A (.324 HEX)	TEI CT4L BASIC TOOL WITH TEI CD3-2 DIE, CLOSURE A (.324 HEX)

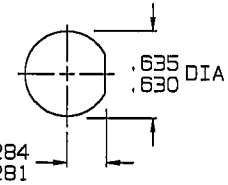

RECOMMENDED PANEL CUTOUT

MAX PNL THK .187

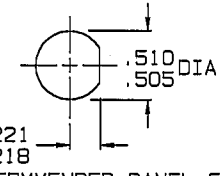

RECOMMENDED PANEL CUTOUT

MAX PNL THK 6

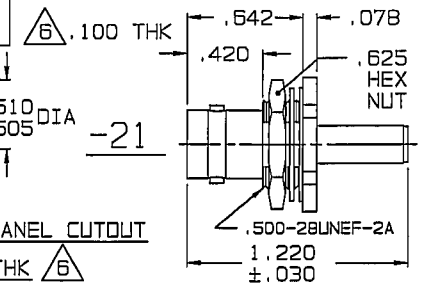

4. EXAMPLE OF COMPLETE PART NO:

105-1244 - 1

BASIC PART NO. — DASH NO (SEE TABLE 1)

3. 50 & 75 OHM FULL CRIMP COAXIAL BNC/TNC CABLE PLUGS/ RECEPTACLE/INSULATED & NONINSULATED BULKHEAD MOUNT CABLE RECEPTACLE/PUSH-ON PLUG & 75 OHM BNC/TNC/PUSH-ON FULL CRIMP COAXIAL CABLE PLUG FOR MONTROSE CABLE NO. CBL6032

2. FINISH: TFS-1A (NICKEL)

1. ALL DIM ARE IN INCHES

5 REPLACE PIN 805-1911-12 WITH PIN 805-1911-11 OR PIN 8-1612-5 WITH PIN 8-1612-4 OR SOCKET 8-1621-5 WITH SOCKET 8-1621-4 OR 8-2762-5 WITH 8-2762-4 AND CRIMP SLEEVE 8-1613-7 WITH CRIMP SLEEVE -101

TOL UNLESS SPECIFIED .XX ± .XXX ± .005 .XXXX ± ANGLES ±	TROMPETER ELECTRONICS, INC.		220/240 SERIES-CBL6032	
DWN DKC 4-7-00	MATERIAL	CODE IDENT	DRAWING NO.	REV
CHK	—	14949	105-1244	A
ENGR				
NEXT ASSY / APPR	SCALE —	DATE 4-27-88	SHEET 1C	