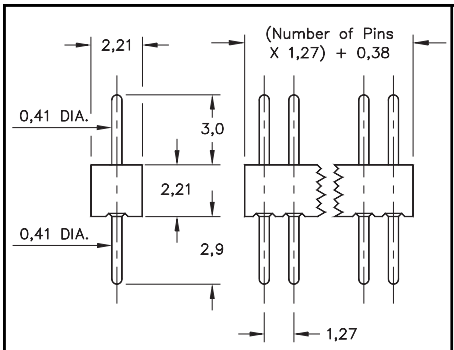

Fig. 1

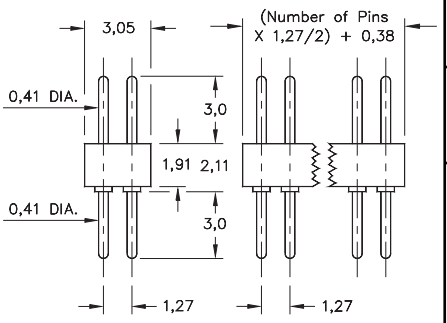

Fig. 2

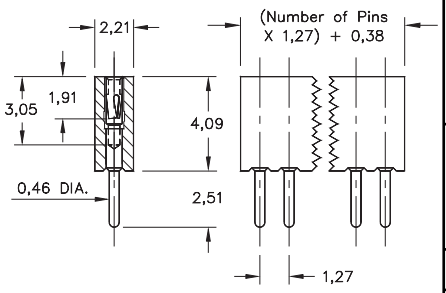

Fig. 3

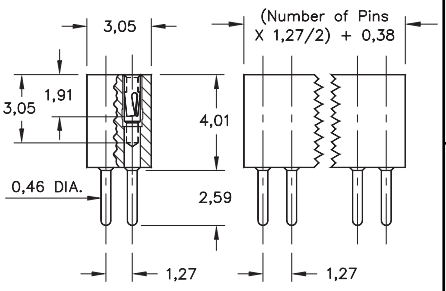

Fig. 4

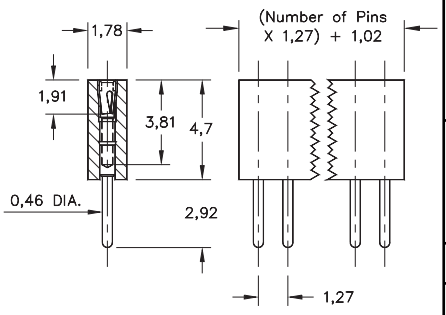

Fig. 5

- Series 850 single and double row interconnects have 1,27 pin spacing & permit board stacking as low as 6,3.
- Pin headers have 0,41 dia. pins (MM #4006-0). See page 175 for details.
- MM #0467 and MM #4890 receptacles use Hi-Rel, 3-finger BeCu #11 contacts rated at 3 amps. (#11 contact accepts pin diameters from 0,38 - 0,51). See pages 129 and 131 for details.
- Insulators are high temp. thermoplastic, suitable for all soldering operations.

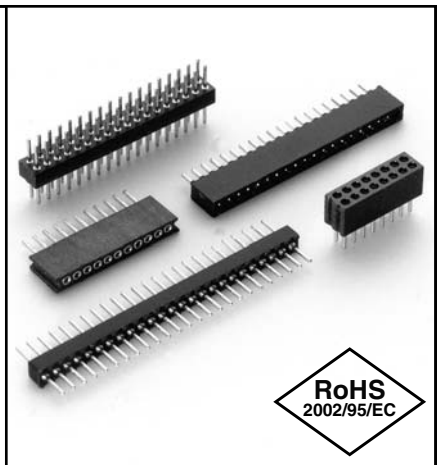

Ordering Information

Fig. 1	**Single Row**	**2,21 Profile Pin Header**
	850-XX-0_ _-10-001000	
	Specify # of pins →	01-50
Fig. 2	**Double Row**	**1,91 Profile Pin Header**
	852-XX-_ _ _-10-001000	
	Specify # of pins →	002-100

For Electrical, Mechanical & Enviromental Data, See pg. 4

XX=Plating Code See Below

For RoHS compliance select ◇ plating code.

SPECIFY PLATING CODE XX=	10◇	90	40◇
Pin Plating	0,25µm Au	5,08µm Sn/Pb	5,08µm Sn

Fig. 3	**Single Row**	**4,09 Profile Socket**
	851-XX-0_ _-10-001000	
	Specify # of pins →	01-50
Fig. 4	**Double Row**	**4,09 Profile Socket**
	853-XX-_ _ _-10-001000	
	Specify # of pins →	002-100
Fig. 5	**Single Row**	**4,7 Profile Socket**
	851-XX-0_ _-10-002000	
	Specify # of pins →	01-77

For Electrical, Mechanical & Enviromental Data, See pg. 4

XX=Plating Code See Below

For RoHS compliance select ◇ plating code.

SPECIFY PLATING CODE XX=			93	99		43◇	
Sleeve (Pin)			5,08µm Sn/Pb	5,08µm Sn/Pb		5,08µm Sn	
Contact (Clip)			0,76µm Au	5,08µm Sn/Pb		0,76µm Au	