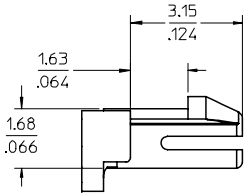

DETAIL "Y"
SCALE 10:1

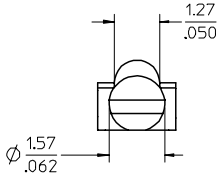

DETAIL "Z"
SCALE 10:1

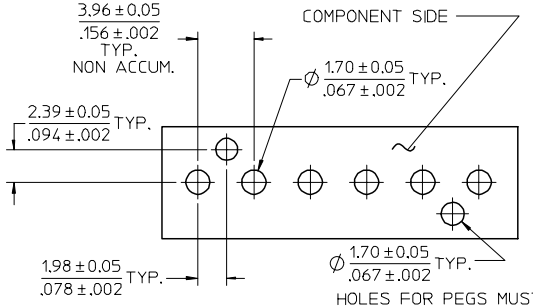

HOLES FOR PEGS MUST NOT HAVE SOLDER PADS OR PLATED THRU HOLES.

RECOMMENDED PC BOARD HOLE LAYOUT

FOR CORRECT ORIENTATION OF PARTS WITH VOIDS, ELIMINATE CORRESPONDING PCB HOLE. (FOR 1.57/.062 THIK PCB)

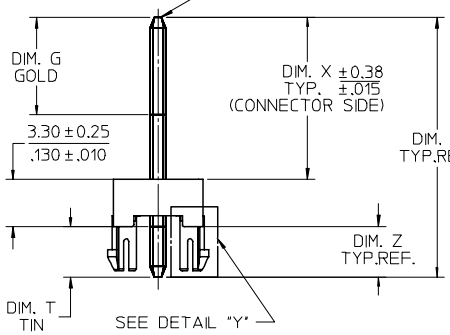

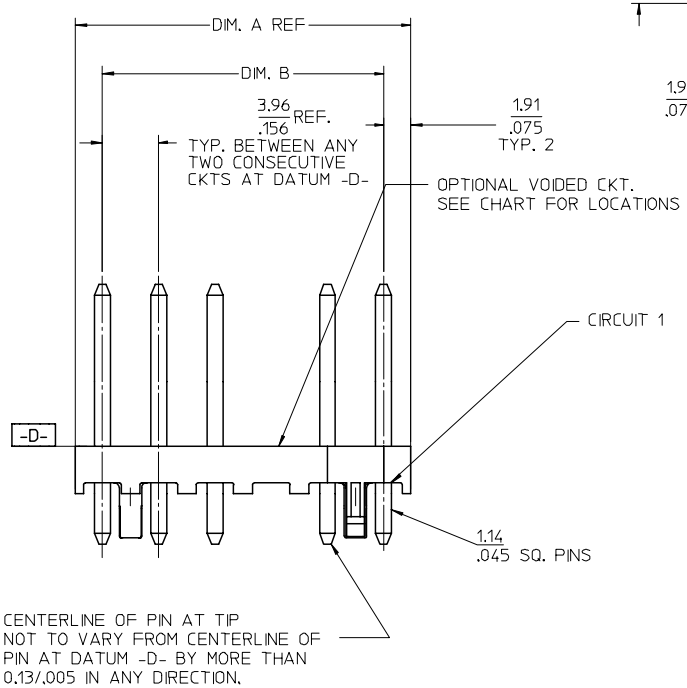

NO. OF CKTS.	NO. OF PEGS	DIM. A	DIM. B
2	1	7.77 / .306	3.96±0.05 / .156±.002
3	2	11.73 / .462	7.92±0.08 / .312±.003
4	2	15.70 / .618	11.89±0.08 / .468±.003
5	2	19.66 / .774	15.85±0.10 / .624±.004
6	2	23.62 / .930	19.81±0.10 / .780±.004
7	2	27.58 / 1.086	23.77±0.10 / .936±.004
8	2	31.55 / 1.242	27.74±0.13 / 1.092±.005
9	2	35.51 / 1.398	31.70±0.13 / 1.248±.005
10	2	39.47 / 1.554	35.66±0.13 / 1.404±.005
11	2	43.43 / 1.710	39.62±0.15 / 1.560±.006
12	2	47.40 / 1.866	43.59±0.15 / 1.716±.006
13	2	51.36 / 2.022	47.55±0.15 / 1.872±.006
14	2	55.32 / 2.178	51.51±0.18 / 2.028±.007
15	2	59.28 / 2.334	55.47±0.18 / 2.184±.007
16	2	63.25 / 2.490	59.44±0.18 / 2.340±.007
17	2	67.21 / 2.646	63.40±0.20 / 2.496±.008
18	2	71.17 / 2.802	67.36±0.20 / 2.652±.008

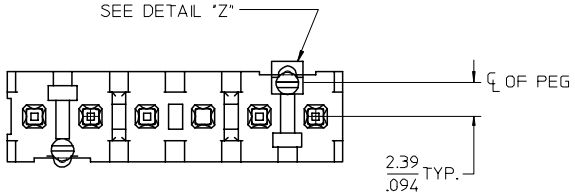

NOTES:
1. MATERIAL: HEADER-GLASS FILLED POLYESTER, 94V-0, MOLDED NATURAL (WHITE).
2. FINISHES: (102) OVERALL TIN: (0.00508)/.000200 MIN.
   OVERALL COPPER UNDERPLATE: (0.00254)/.000100 MIN.
   (208) SELECT GOLD: (0.00038)/.000015 MIN.,
   *SELECT TIN: (0.00254)/.000100 MIN.,
   OVERALL NICKEL UNDERPLATE: (0.00127)/.000050 MIN.
   (228) SELECT GOLD: (0.00076)/.000030 MIN.,
   *SELECT TIN: (0.00254)/.000100 MIN.,
   OVERALL NICKEL UNDERPLATE: (0.00127)/.000050 MIN.
   (501) OVERALL GOLD: (0.0051)/.000020 MIN.
   OVERALL NICKEL UNDERPLATE: (0.00076)/.000030 MIN.

   * THE PRIMARY SHIPPING CARTON WILL BE LABELED 'COMPLIANT TO RoHS DIRECTIVE 2002/95/EC AND ELV ANNEX II OF DIRECTIVE 000/53/EC CARTONS WITHOUT THIS LABEL MAY CONTAIN PRODUCT WITH TIN/LEAD PLATINGS.
3. PRODUCT SPECIFICATION: SEE PS-08-50.
4. PACKAGING SPECIFICATION: SEE CHARTS
5. PARTS ARE STACKABLE END TO END ON (3.96)/.156 CENTERS.
6. FOR PARTS WITHOUT PEGS, SEE DRAWING SDA-41771.
7. SOLDERABILITY: WHEN PARTS ARE SOLDERED AT A TEMPERATURE OF (230°C) OR (446°F) FOR 5 SECONDS, EACH SOLDERED SURFACE SHALL BE A MINIMUM OF 95% COVERED WITH A SMOOTH CONTINUOUS ADHERENT COATING. FOR OTHER INFORMATION SEE SMES-152.
8. PIN PUSH OUT FORCE: PRIOR TO SOLDERING, A 3 LB MINIMUM FORCE (IN EITHER DIRECTION) SHALL BE REQUIRED TO PUSH THE PIN OUT OF THE HEADER.
9. 6 CIRCUIT PART SHOWN.
10. THIS PART CONFORMS TO CLASS B REQUIREMENTS OF COSMETIC SPECIFICATION PS-45499-002.

SHT.	REV.
2-*	E
1	E1

UPDATE NOTES
EC NO: UCP2007-2132 2007/03/21
DRWN:PRIDDER 2007/03/27
CHKD:ADERR 2007/03/28
APPR:FSMITH
DESCRIPTION
REV E1

QUALITY SYMBOLS
▼=0
⚠=0

GENERAL TOLERANCES (UNLESS SPECIFIED)

	mm	INCH
4 PLACES	± ---	± ---
3 PLACES	± ---	± ---
2 PLACES	± ---	± ---
1 PLACE	± ---	± ---
ANGULAR ±1/2°		

DRAFT WHERE APPLICABLE MUST REMAIN WITHIN DIMENSIONS

DIMENSION STYLE: MM/IN
SCALE: 4:1
DESIGN UNITS: INCH
THIRD ANGLE PROJECTION

		DATE
DRAWN BY	SAMIEC	1991/01/14
CHECKED BY	PATEL	1991/01/14
APPROVED BY	LENZ	1991/01/14

TITLE: FLAT HEADER ASSEMBLY (3.96)/.156 CENTERS, SQ STRAIGHT PINS, W/ PEGS

molex MOLEX INCORPORATED

MATERIAL NO.: SEE CHART
DOCUMENT NO.: SD-42871-001
SHEET NO.: 1 OF *
SIZE: C

THIS DRAWING CONTAINS INFORMATION THAT IS PROPRIETARY TO MOLEX INCORPORATED AND SHOULD NOT BE USED WITHOUT WRITTEN PERMISSION

ENG. NO: A-42871-0002/0018	
HEADER NUMBER	41770-0036/0052
PIN NUMBER	2161-94(102)
PLATING	102
DIM. L	(18.29)/.720
DIM. X	(11.43)/.450
DIM. G (GOLD)	N/A
DIM. Z	(3.56)/.140
DIM. T (TIN)	OVERALL
VOID CKTS	NONE
PACKAGING	PK-42871-001 (BULK)

CKTS	EDP NO.	ENG. NO.
02	26-60-9020	A-42871-0002
03	26-60-9030	A-42871-0003
04	26-60-9040	A-42871-0004
05	26-60-9050	A-42871-0005
06	26-60-9060	A-42871-0006
07	26-60-9070	A-42871-0007
08	26-60-9080	A-42871-0008
09	26-60-9090	A-42871-0009
10	26-60-9100	A-42871-0010
11	26-60-9110	A-42871-0011
12	26-60-9120	A-42871-0012
13	26-60-9130	A-42871-0013
14	26-60-9140	A-42871-0014
15	26-60-9150	A-42871-0015
16	26-60-9160	A-42871-0016
17	26-60-9170	A-42871-0017
18	26-60-9180	A-42871-0018

ENG. NO: A-42871-0104/0120	
HEADER NUMBER	41770-0036/0052
PIN NUMBER	43294-0209
PLATING	208
DIM. L	(18.29)/.720
DIM. X	(11.43)/.450
DIM. G (GOLD)	(6.86)/.270
DIM. Z	(3.56)/.140
DIM. T (TIN)	(4.06)/.160
VOID CKTS	NONE
PACKAGING	PK-42871-001 (BULK)

CKTS	EDP NO.	ENG. NO.
02	42871-0104	A-42871-0104
03	42871-0105	A-42871-0105
04	42871-0106	A-42871-0106
05	42871-0107	A-42871-0107
06	42871-0108	A-42871-0108
07	42871-0109	A-42871-0109
08	42871-0110	A-42871-0110
09	42871-0111	A-42871-0111
10	42871-0112	A-42871-0112
11	42871-0113	A-42871-0113
12	42871-0114	A-42871-0114
13	42871-0115	A-42871-0115
14	42871-0116	A-42871-0116
15	42871-0117	A-42871-0117
16	42871-0118	A-42871-0118
17	42871-0119	A-42871-0119
18	42871-0120	A-42871-0120

ENG. NO: A-42871-0121/0137	
HEADER NUMBER	41770-0036/0052
PIN NUMBER	43294-0210
PLATING	228
DIM. L	(18.29)/.720
DIM. X	(11.43)/.450
DIM. G (GOLD)	(6.86)/.270
DIM. Z	(3.56)/.140
DIM. T (TIN)	(4.06)/.160
VOID CKTS	NONE
PACKAGING	PK-42871-001 (BULK)

CKTS	EDP NO.	ENG. NO.
02	42871-0121	A-42871-0121
03	42871-0122	A-42871-0122
04	42871-0123	A-42871-0123
05	42871-0124	A-42871-0124
06	42871-0125	A-42871-0125
07	42871-0126	A-42871-0126
08	42871-0127	A-42871-0127
09	42871-0128	A-42871-0128
10	42871-0129	A-42871-0129
11	42871-0130	A-42871-0130
12	42871-0131	A-42871-0131
13	42871-0132	A-42871-0132
14	42871-0133	A-42871-0133
15	42871-0134	A-42871-0134
16	42871-0135	A-42871-0135
17	42871-0136	A-42871-0136
18	42871-0137	A-42871-0137

ENG. NO: A-42871-0036/0052	
HEADER NUMBER	41770-0036/0052
PIN NUMBER	2161-3(102)
PLATING	102
DIM. L	(23.80)/.937
DIM. X	(16.89)/.665
DIM. G (GOLD)	N/A
DIM. Z	(3.61)/.142
DIM. T (TIN)	OVERALL
VOID CKTS	NONE
PACKAGING	PK-42871-002 (BULK)

CKTS	EDP NO.	ENG. NO.
02	26-60-9021	A-42871-0036
03	26-60-9031	A-42871-0037
04	26-60-9041	A-42871-0038
05	26-60-9051	A-42871-0039
06	26-60-9061	A-42871-0040
07	26-60-9071	A-42871-0041
08	26-60-9081	A-42871-0042
09	26-60-9091	A-42871-0043
10	26-60-9101	A-42871-0044
11	26-60-9111	A-42871-0045
12	26-60-9121	A-42871-0046
13	26-60-9131	A-42871-0047
14	26-60-9141	A-42871-0048
15	26-60-9151	A-42871-0049
16	26-60-9161	A-42871-0050
17	26-60-9171	A-42871-0051
18	26-60-9181	A-42871-0052

REV:	ECR/ECN INFORMATION	TITLE:	SHEET No.
E	EC No: **UCP2007-0377** DATE: **2006-08-09**	FLAT HEADER ASSEMBLY (3.96)/.156 CENTERS, SQ STRAIGHT PINS, W/ PEGS	**- 2 -**

DOCUMENT NUMBER:	CREATED / REVISED BY:	CHECKED BY:	APPROVED BY:
SD-42871-001	**PRIDDER**	**ADERR**	**FSMITH**

ENG. NO: A-42871-0138/0154	
HEADER NUMBER	41770-0036/0052
PIN NUMBER	43294-0416
PLATING	208
DIM. L	(23.88)/.940
DIM. X	(16.89)/.665
DIM. G (GOLD)	(8.89)/.350
DIM. Z	(3.68)/.145
DIM. T (TIN)	(4.06)/.160
VOID CKTS	NONE
PACKAGING	PK-42871-002 (BULK)

CKTS	EDP NO.	ENG. NO.
02	42871-0138	A-42871-0138
03	42871-0139	A-42871-0139
04	42871-0140	A-42871-0140
05	42871-0141	A-42871-0141
06	42871-0142	A-42871-0142
07	42871-0143	A-42871-0143
08	42871-0144	A-42871-0144
09	42871-0145	A-42871-0145
10	42871-0146	A-42871-0146
11	42871-0147	A-42871-0147
12	42871-0148	A-42871-0148
13	42871-0149	A-42871-0149
14	42871-0150	A-42871-0150
15	42871-0151	A-42871-0151
16	42871-0152	A-42871-0152
17	42871-0153	A-42871-0153
18	42871-0154	A-42871-0154

ENG. NO: A-42871-0155/0171	
HEADER NUMBER	41770-0036/0052
PIN NUMBER	43294-0417
PLATING	228
DIM. L	(23.88)/.940
DIM. X	(16.89)/.665
DIM. G (GOLD)	(8.89)/.350
DIM. Z	(3.68)/.145
DIM. T (TIN)	(4.06)/.160
VOID CKTS	NONE
PACKAGING	PK-42871-002 (BULK)

CKTS	EDP NO.	ENG. NO.
02	42871-0155	A-42871-0155
03	42871-0156	A-42871-0156
04	42871-0157	A-42871-0157
05	42871-0158	A-42871-0158
06	42871-0159	A-42871-0159
07	42871-0160	A-42871-0160
08	42871-0161	A-42871-0161
09	42871-0162	A-42871-0162
10	42871-0163	A-42871-0163
11	42871-0164	A-42871-0164
12	42871-0165	A-42871-0165
13	42871-0166	A-42871-0166
14	42871-0167	A-42871-0167
15	42871-0168	A-42871-0168
16	42871-0169	A-42871-0169
17	42871-0170	A-42871-0170
18	42871-0171	A-42871-0171

ENG. NO: A-42871-0019/0035	
HEADER NUMBER	41770-0036/0052
PIN NUMBER	2161-94(501)
PLATING	501
DIM. L	(18.29)/.720
DIM. X	(11.43)/.450
DIM. G (GOLD)	OVERALL
DIM. Z	(3.56)/.140
DIM. T (TIN)	N/A
VOID CKTS	NONE
PACKAGING	PK-42871-001 (BULK)

CKTS	EDP NO.	ENG. NO.
02	26-61-9020	A-42871-0019
03	26-61-9030	A-42871-0020
04	26-61-9040	A-42871-0021
05	26-61-9050	A-42871-0022
06	26-61-9060	A-42871-0023
07	26-61-9070	A-42871-0024
08	26-61-9080	A-42871-0025
09	26-61-9090	A-42871-0026
10	26-61-9100	A-42871-0027
11	26-61-9110	A-42871-0028
12	26-61-9120	A-42871-0029
13	26-61-9130	A-42871-0030
14	26-61-9140	A-42871-0031
15	26-61-9150	A-42871-0032
16	26-61-9160	A-42871-0033
17	26-61-9170	A-42871-0034
18	26-61-9180	A-42871-0035

ENG. NO: A-42871-0053/0069	
HEADER NUMBER	41770-0036/0052
PIN NUMBER	2161-3(501)
PLATING	501
DIM. L	(23.80)/.937
DIM. X	(16.89)/.665
DIM. G (GOLD)	OVERALL
DIM. Z	(3.61)/.142
DIM. T (TIN)	N/A
VOID CKTS	NONE
PACKAGING	PK-42871-002 (BULK)

CKTS	EDP NO.	ENG. NO.
02	26-61-9021	A-42871-0053
03	26-61-9031	A-42871-0054
04	26-61-9041	A-42871-0055
05	26-61-9051	A-42871-0056
06	26-61-9061	A-42871-0057
07	26-61-9071	A-42871-0058
08	26-61-9081	A-42871-0059
09	26-61-9091	A-42871-0060
10	26-61-9101	A-42871-0061
11	26-61-9111	A-42871-0062
12	26-61-9121	A-42871-0063
13	26-61-9131	A-42871-0064
14	26-61-9141	A-42871-0065
15	26-61-9151	A-42871-0066
16	26-61-9161	A-42871-0067
17	26-61-9171	A-42871-0068
18	26-61-9181	A-42871-0069

REV:	ECR/ECN INFORMATION	TITLE:	SHEET No.
E	EC No: **UCP2007-0377** DATE: **2006-08-09**	FLAT HEADER ASSEMBLY (3.96)/.156 CENTERS, SQ STRAIGHT PINS, W/ PEGS	**- 3 -**

DOCUMENT NUMBER:	CREATED / REVISED BY:	CHECKED BY:	APPROVED BY:
SD-42871-001	**PRIDDER**	**ADERR**	**FSMITH**

ENG. NO: A-42871-0070/0086	
HEADER NUMBER	41770-0036/0052
PIN NUMBER	2161-16(102)
PLATING	102
DIM. L	(25.40)/1.000
DIM. X	(18.29)/.720
DIM. G (GOLD)	N/A
DIM. Z	(3.81)/.150
DIM. T (TIN)	OVERALL
VOID CKTS	NONE
PACKAGING	PK-42871-002

CKTS	EDP NO.	ENG. NO.
02		A-42871-0070
03		A-42871-0071
04		A-42871-0072
05		A-42871-0073
06	26-60-9062	A-42871-0074
07		A-42871-0075
08		A-42871-0076
09		A-42871-0077
10		A-42871-0078
11		A-42871-0079
12		A-42871-0080
13		A-42871-0081
14		A-42871-0082
15		A-42871-0083
16		A-42871-0084
17		A-42871-0085
18		A-42871-0086

ENG. NO: A-42871-0087/0103	
HEADER NUMBER	41770-0036/0052
PIN NUMBER	2161-22(501)
PLATING	501
DIM. L	(31.75)/1.250
DIM. X	(25.27)/.995
DIM. G (GOLD)	OVERALL
DIM. Z	(3.18)/.125
DIM. T (TIN)	N/A
VOID CKTS	NONE
PACKAGING	PK-42871-003

CKTS	EDP NO.	ENG. NO.
02	42871-0087	A-42871-0087
03	42871-0088	A-42871-0088
04	42871-0089	A-42871-0089
05	42871-0090	A-42871-0090
06	42871-0091	A-42871-0091
07	42871-0092	A-42871-0092
08	42871-0093	A-42871-0093
09	42871-0094	A-42871-0094
10	42871-0095	A-42871-0095
11	42871-0096	A-42871-0096
12	42871-0097	A-42871-0097
13	42871-0098	A-42871-0098
14	42871-0099	A-42871-0099
15	42871-0100	A-42871-0100
16	42871-0101	A-42871-0101
17	42871-0102	A-42871-0102
18	42871-0103	A-42871-0103

ENG. NO:	
HEADER NUMBER	
PIN NUMBER	
PLATING	
DIM. L	
DIM. X	
DIM. G (GOLD)	
DIM. Z	
DIM. T (TIN)	
VOID CKTS	
PACKAGING	

CKTS	EDP NO.	ENG. NO.
02		
03		
04		
05		
06		
07		
08		
09		
10		
11		
12		
13		
14		
15		
16		
17		
18		

ENG. NO:	
HEADER NUMBER	
PIN NUMBER	
PLATING	
DIM. L	
DIM. X	
DIM. G (GOLD)	
DIM. Z	
DIM. T (TIN)	
VOID CKTS	
PACKAGING	

CKTS	EDP NO.	ENG. NO.
02		
03		
04		
05		
06		
07		
08		
09		
10		
11		
12		
13		
14		
15		
16		
17		
18		

REV:	ECR/ECN INFORMATION	TITLE:	SHEET No.
E	EC No: **UCP2007-0377** DATE: **2006-08-09**	FLAT HEADER ASSEMBLY (3.96)/.156 CENTERS, SQ STRAIGHT PINS, W/ PEGS	**- 4 -**

DOCUMENT NUMBER:	CREATED / REVISED BY:	CHECKED BY:	APPROVED BY:
SD-42871-001	**PRIDDER**	**ADERR**	**FSMITH**