Am188EM MICROCONTROLLER BLOCK DIAGRAM

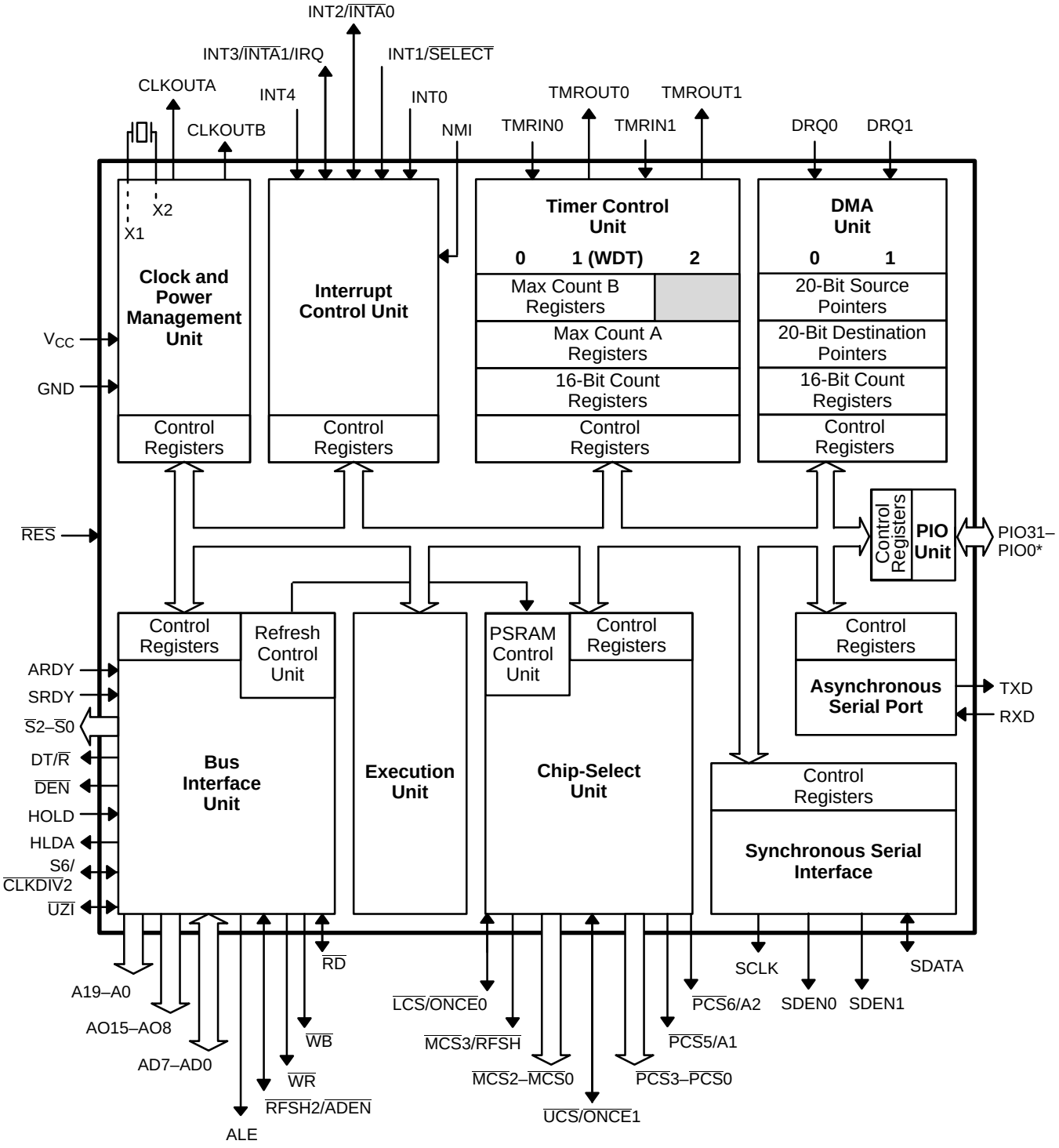

Note:
** All PIO signals are shared with other physical pins. See the pin descriptions beginning on page 24 and Table 2 on page 28 for information on shared function.*