Surface Mount Clock Oscillator

Series CPO

- ***Tristate capable***
- ***TTL/HCMOS compatible***

Part Numbering Example: CP0 Z A2 B2 45 - 33.333 TS

CPO	Z	A2	B2	45	33.333	TS
SERIES	**ADDED FEATURES**	**OPERATING TEMP.**	**STABILITY**	**SYMMETRY**	**FREQUENCY**	**TRI STATE**
CPO	BLANK = BULK PACK Z = TAPE AND REEL	Blank = 0°C ~ +70°C A2 = -40°C ~ +85°C	Blank = ±100 ppm B2 = ± 50 ppm	Blank = 40/60% 45 = 45/55%		Tri State Standard

Specifications:

Frequency Range:	1.500 MHz to 70.000 MHz
Available Stability Options:	±100 ppm *Standard* ±50 ppm ±25 ppm
Output Series:	TTL/HCMOS
Input Voltage:	+5.0 VDC ±10%
Operating Temperature Range Options:	-10°C to +70°C *Standard* -40°C to +85°C
Output Voltage:	V_{OL} = 0.5 V Max. V_{OH} = 4.5 V Min.
Output Load:	10 TTL or 50 pf (1.500 to 49.999 MHz) 10 TTL or 30 pf (50.000 to 70.000 MHz)
Maximum Input Current:	23 mA (1.500 to 26.999 MHz) 30 mA (27.000 to 29.999 MHz) 35 mA (30.000 to 49.999 MHz) 45 mA (50.000 to 69.999 MHz)
Maximum Rise/Fall Time:	8 ns (1.500 to 49.999 MHz) 7 ns (50.000 to 70.000 MHz)
Duty Cycle:	40/60% 45/55%
Maximum Frequency Aging at +25°C:	±5 ppm/yr
Max. Start-Up Time:	10 ms
Tristate Input:	+0.80 VDC Max. to Disable +3.60 VDC Min. to Enable or open to Enable
Storage Temperature:	-55°C to +125°C
Package:	Tape and Reel (1K per Reel)

CPO

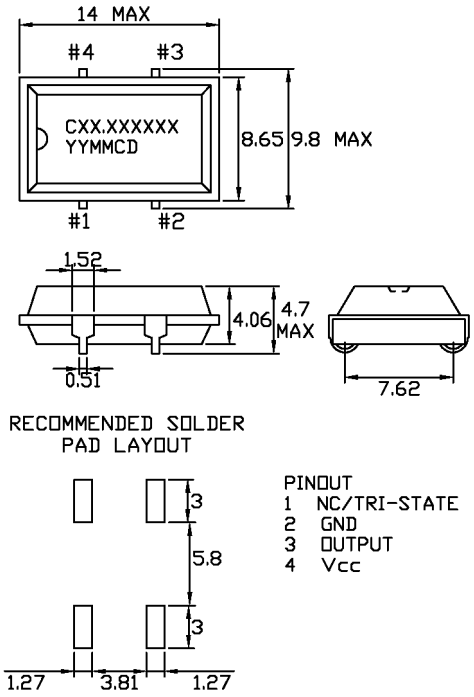

TEST CIRCUIT

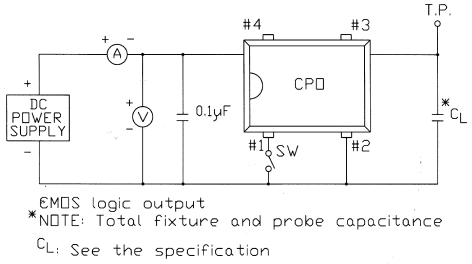

OUTPUT WAVE FORM

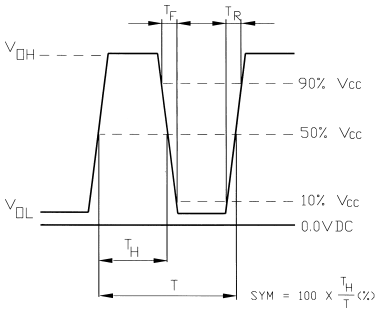

Cardinal Components, Inc., 155 Rt. 46 W, Wayne, NJ. 07470 TEL: (973)785-1333 FAX: (973)785-0053
http://www.cardinalxtal.com E-Mail: cardinal@cardinalxtal.com