液晶之友 电话：020-33819057
Http://www.lcdfriends.com

AF-06464B1

•64 x 64 dots 1/64 Duty

FEATURE

1.Construction : LCD panel and COF .

2.Option : EL Back-Light

3.LCD controller & Driver : ST7565S

4.Interface mode: 8Bit 8080

5.Extend temperature type.

ELECTRICAL CHARACTERISTICS

Parameter	Symbol	Condition	Typ.Value	Unit.
LCD Driving Voltage	VDD-VSS	25°C	9.5	V
Supply Current	IDD	VDD=2.8V	0.3	mA

INTERFACE

1	2	3	4	5	6	7	8	9	10
NC	/CSI	/RES	A0	/WR	/RD	D0	D1	D2	D3
11	12	13	14	15	16	17	18		
D4	D5	D6	D7	VDD	VSS	C86	NC		

BLOCK DIAGRAM & POWER SUPPLY

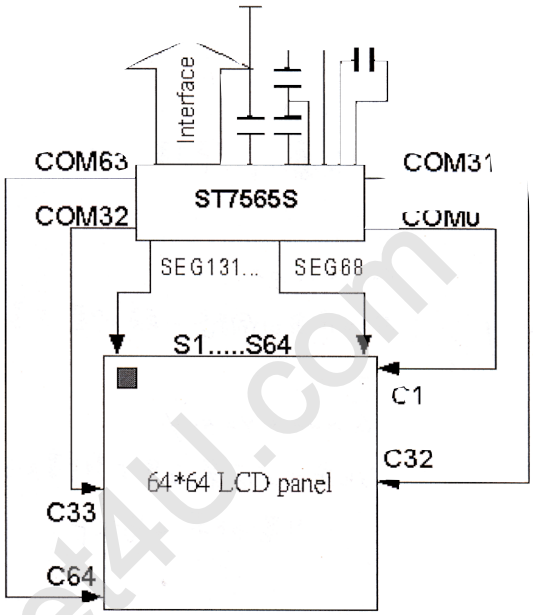

SHL=0 ; COM0¡COM63
ADC=1 ; SEG103¡SEG0

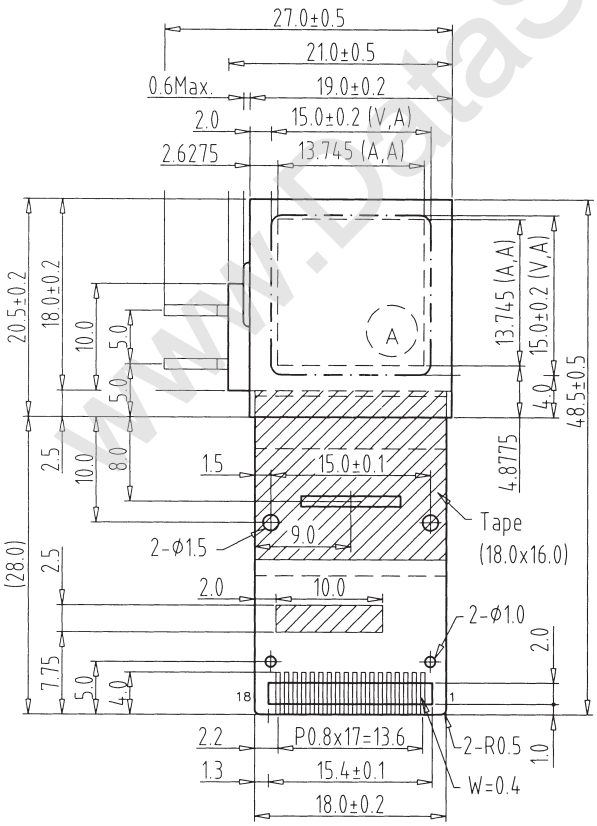

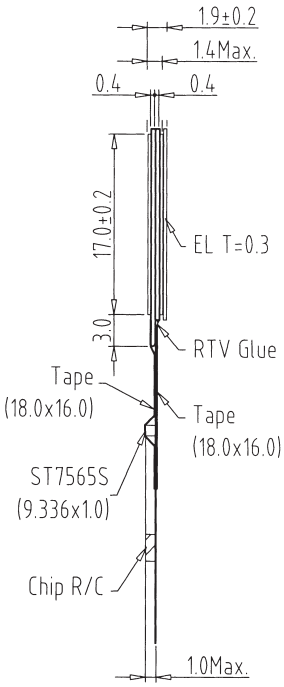

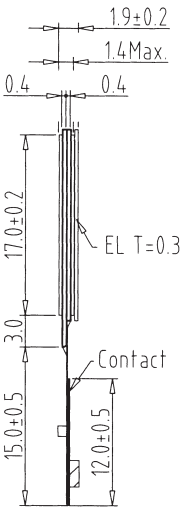

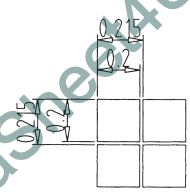

A BLOCK

www.DataSheet4U.com
www.DataSheet4U.com