3mm Infrared Emitter

MTE9052C

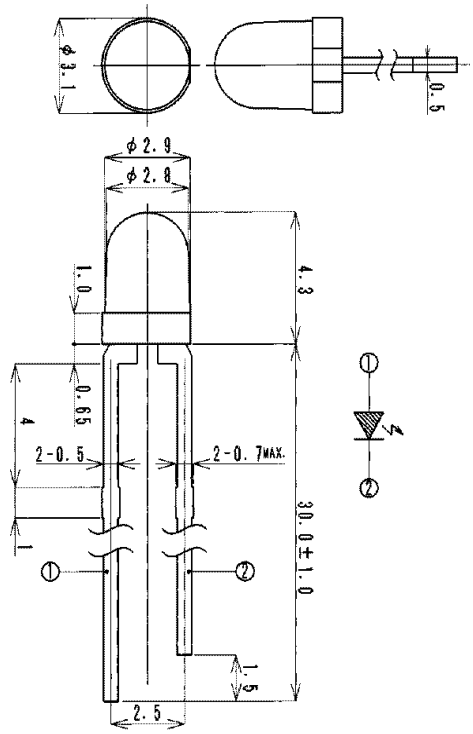

Features

High Output Power
High Reliability

Applications

Optical Switches
Bar Code Reader

Maximum Ratings (Ta=25°C)

Characteristic	Symbol	Max.	Test Condition	Unit
Forward Current	I_F	60	–	mA
Pulsed Forward Current	I_{FP}	1.00	tw=10μ S, T=10mS	A
Reverse Voltage	V_R	5	–	V
Power Dissipation	P_D	100.00	–	mW
Operating Temperature	T_{opr}	−20 ~ +80	–	°C
Storage Temperature	T_{stg}	−30 ~+100	–	°C
Junction Temperature	T_j	100	–	°C
Soldering Temperature	T_{sol}	260	for 5 sec. max	°C

Opto−Electrical Characteristics (Ta=25°C)

Characteristic	Symbol	Test Condition	Min	Typ	Max	Unit
Forward Voltage	V_F	I_F=20mA	–	1.20	1.50	V
Reverse Current	I_R	V_R=5V	–	–	10	μA
Power Output	PO	I_F=20mA	–	4.00	–	mW
Half Intensity Beam Angle	θ	–	–	± 30°	–	deg.
Peak Wavelength	λp	I_F=20mA	–	950	–	nm
Spectral Line Half Width	Δλ	I_F=20mA	–	50	–	nm

Company Headquarters
3 Northway Lane North
Latham, New York 12110
Toll Free: 800.984.5337
Fax: 518.785.4725

Web: www.marktechopto.com | Email: info@marktechopto.com

West Coast Sales Office
950 South Coast Drive, Suite 265
Costa Mesa, California 92626
Toll Free: 800.984.5337
Fax: 714.850.9314

MTE9052C Graphs

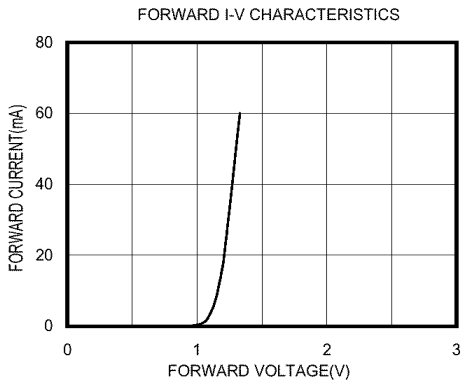

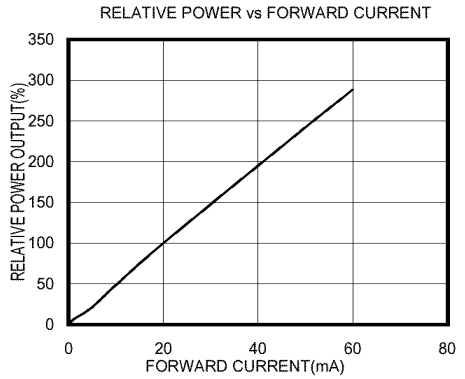

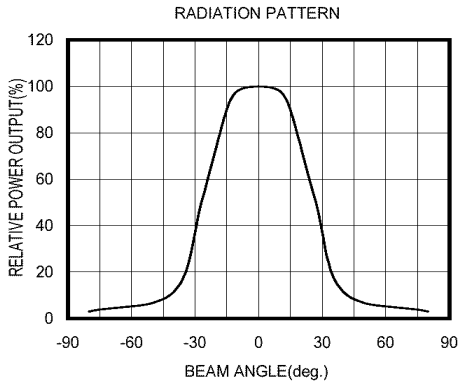

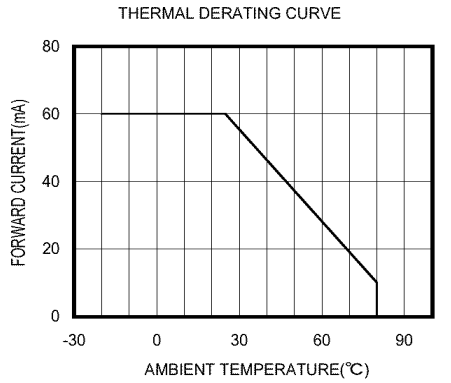

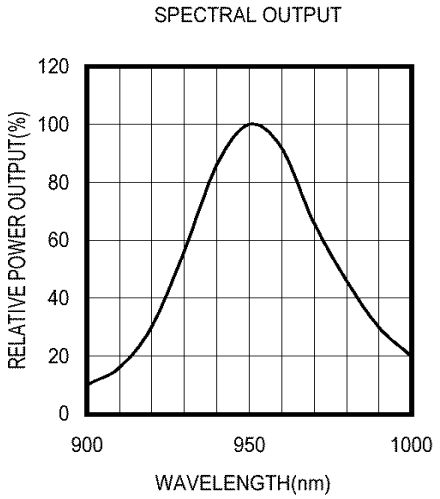

Company Headquarters
3 Northway Lane North
Latham, New York 12110
Toll Free: 800.984.5337
Fax: 518.785.4725

Web: www.marktechopto.com | Email: info@marktechopto.com

West Coast Sales Office
950 South Coast Drive, Suite 265
Costa Mesa, California 92626
Toll Free: 800.984.5337
Fax: 714.850.9314